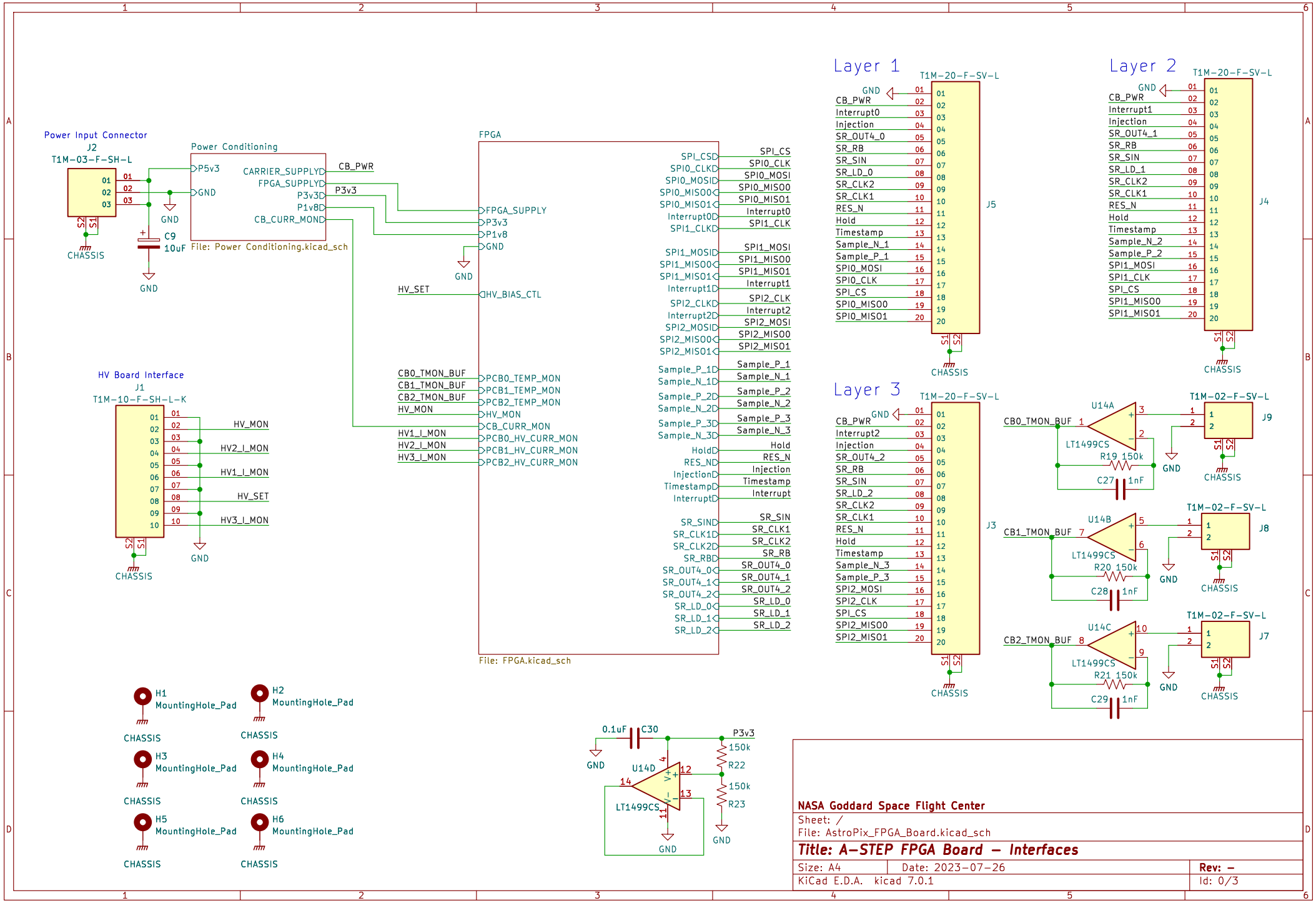

NASA Goddard Space Flight Center

Sheet: /

File: AstroPix_FPGA_Board.kicad_sch

Title: A-STEP FPGA Board – Interfaces

Size: A4	Date: 2023-07-26	Rev: –
KiCad E.D.A. kicad 7.0.1		Id: 0/3

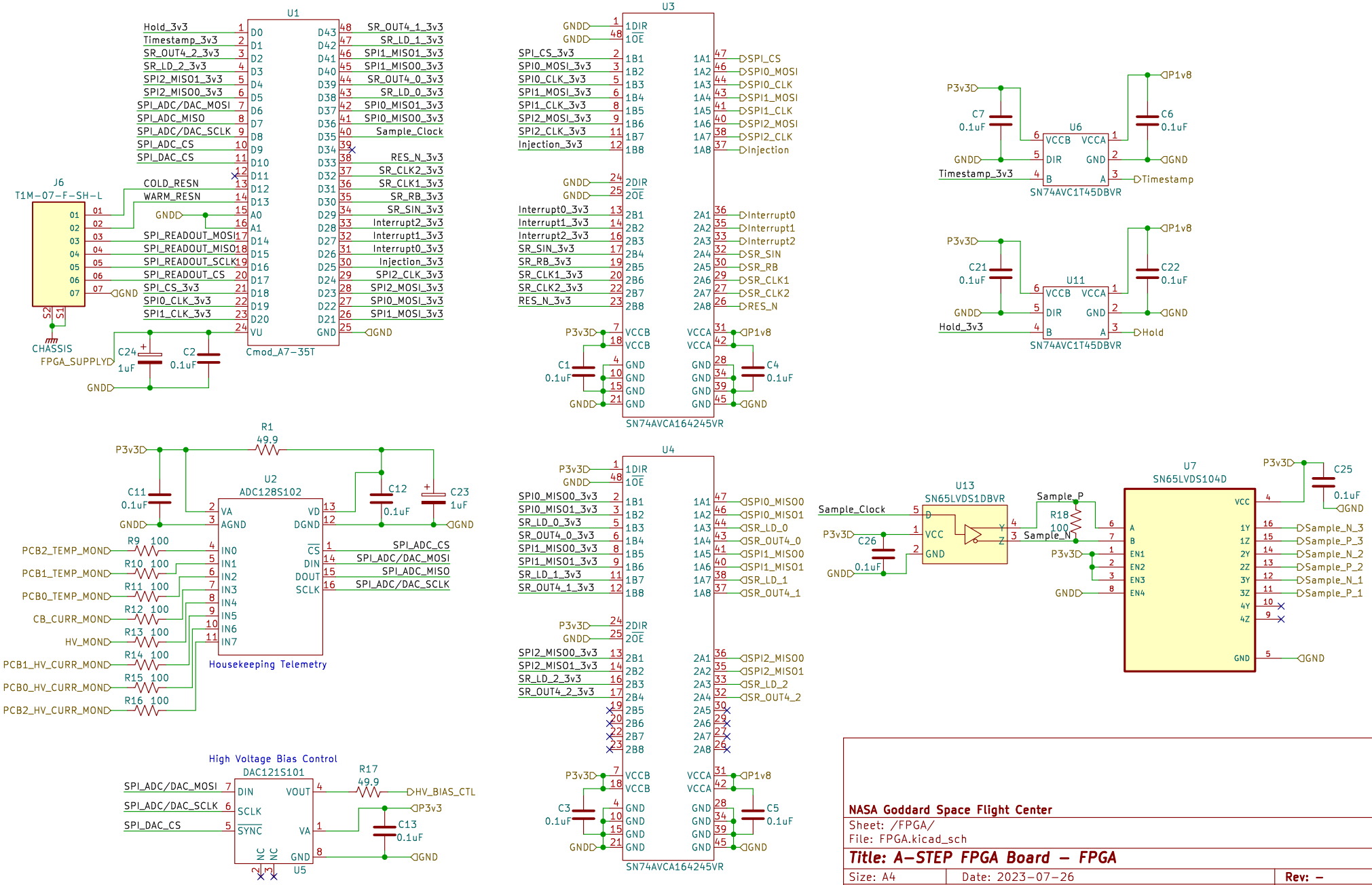

NASA Goddard Space Flight Center

Sheet: /FPGA/

File: FPGA.kicad_sch

Title: A-STEP FPGA Board – FPGA

Size: A4	Date: 2023-07-26	Rev: –
KiCad E.D.A. kicad 7.0.1		Id: 3/3

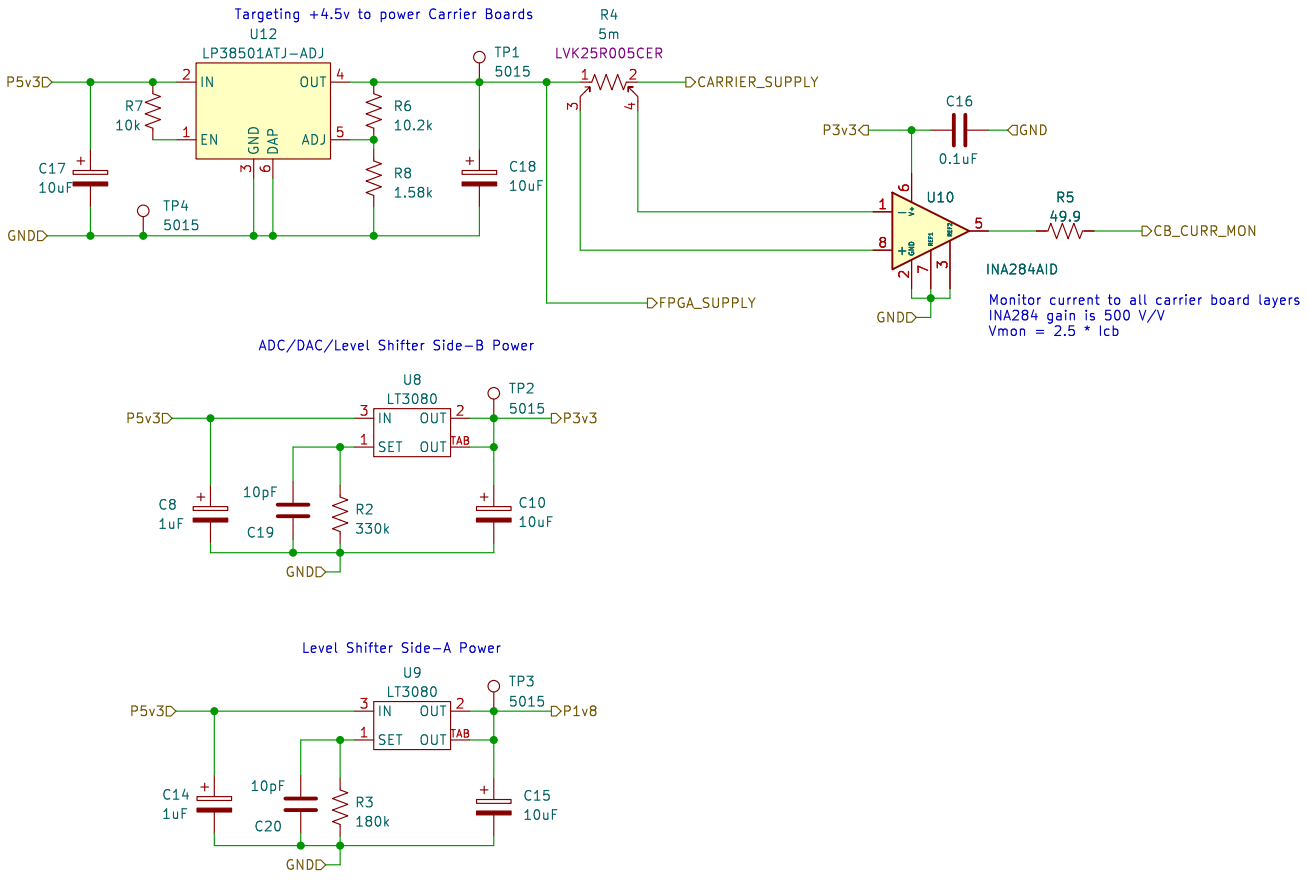

NASA Goddard Space Flight Center

Sheet: /Power Conditioning/
File: Power Conditioning.kicad_sch

Title: A-STEP FPGA Board – Power Conditioning

Size: A4	Date: 2023-07-26	**Rev: –**
KiCad E.D.A. kicad 7.0.1		Id: 4/3